TECO	OUTLINE DIMENSIONS 3-PHASE INDUCTION MOTOR	FRAME NO : D100L

POLE	kW	HP	RPM	FRAME
6	1.5	2	950	D100L-6

Totally Enclosed Fan-Cooled Type. Squirrel-Cage Rotor.

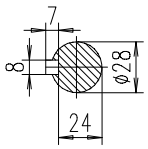

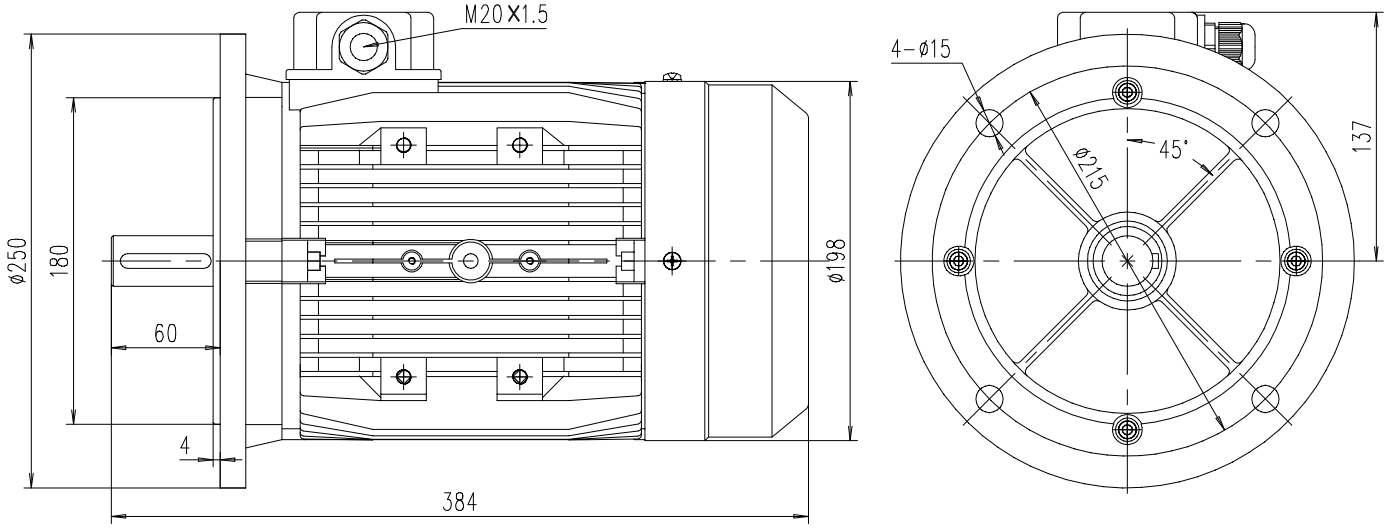

NOTES:
1. FLANGE MOUNTED IM3001.
2. IP55 PROTECTION.

MAX ALLOY

DWN.	LL	24. 07. 25	REV : 00
CHKD.	DP	24. 07. 25	
APPD.	AN	24. 07. 25	